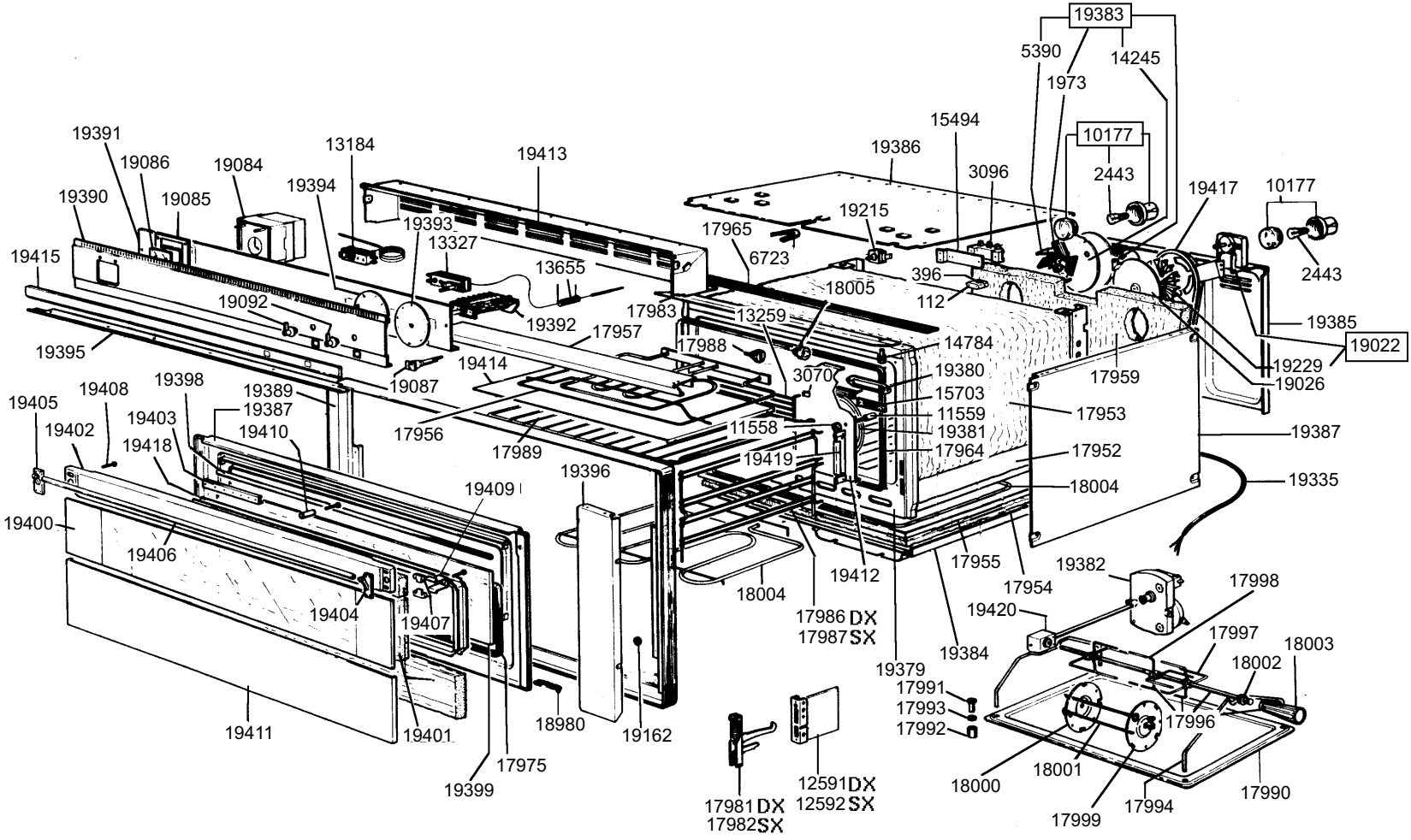
19383
5390
1973
14245
10177
2443
19391
19086
19084
13184
19413
19386
15494
3096
19390
19085
19394
19393
13327
19215
17965
6723
19417
10177
2443
19415
13655
396
112
18005
19092
19392
17983
17957
13259
19385
19022
19395
19087
19414
17988
14784
19229
19026
3070
19380
17959
19408
19398
19389
15703
19405
19387
17953
19387
19402
19403
19410
11559
11558
19381
19418
17964
17952
19419
19396
19335
19409
18004
19400
19406
17955
19382
17954
17998
19412
19420
19404
19407
17986 DX
17987 SX
19384
17997
18003
19379
18002
17991
17993
17992
17996
19411
19401
18980
19162
17975
18001
18000
17990
19399
12591 DX
12592 SX
17994
17999
17981 DX
17982 SX